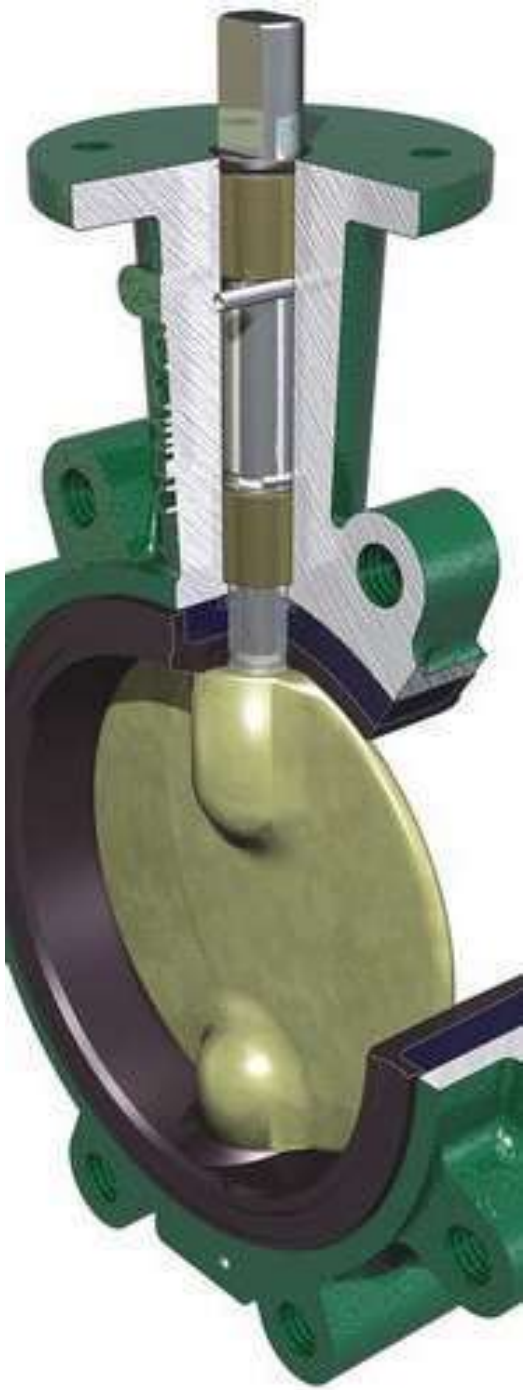

PRODUCTS AVAILABLE
VALVES & FITTINGS

- Valves – Demco Butterfly Valves – From 2” to 10” in stock in wafer and lug design. Demco Gate Valve Spares available.
- Parker Fittings – Most common series of hose and instrumentation fittings from ¼ to 1-1/2” size is available in stock.
- Parker 6K Valves – Needle and ball valves available from stock.
- SS Ball Valves from ¼ to 1-1/2” in available
- Brass Ball Valves from ¼” to 2” in stock
- Globe Valves in limited sizes in stock upto 4”
- Pneumatic Hose Fittings from Dixon and Campbell
- Valve Lockout Products available from Brady

PRODUCTS AVAILABLE
LEWIS SNAKE GRIPS

LSG Snake Grips are used to pull a new cable/wire with the existing cable/wire that is being replaced. Snake grips are part of Lewis Pulling Grips line of products and typically are used on Drilling Rigs & Platform. The Lewis Snake Grips expand or contract to grip different or identical cable and/or rope sizes as per the customer's needs.

The LSG-X Snake Grips perform the same function as the standard LSG Snake Grips. However, an LSG-X Snake Grip cannot be taken apart in the middle, the two grip sides are permanently attached via the grip's "Swivel Tube Assembly".

Snake Grips from Lewis USA is available from ¼ size to 3" sizes in LSG and LSG-X version.

PRODUCTS AVAILABLE
RUBBER EXPANSION JOINTS

KKD Marine stocks Rubber Expansion Joints. These Rubber expansion joints are engineered rubber products that are inserted in rigid piping systems to absorb movements, improve thermal stability and compensate for misalignment. Their performance is crucial for the safety and reliability of the entire system.

Stocks available from 2” to 8” from ready stock and other sizes can be procured against specific request.

The products are typically made in China but there are limited stocks available from Brands like Trelleborg as well.

PRODUCTS AVAILABLE
RING GASKETS

KKD Marine has a good inventory of Ring Joint Gaskets are suitable for high pressure and high temperature applications. The Joint Gaskets are available in R, RX, BX styles and in oval/octagonal profiles in accordance with specific tolerances on CNC machines.

Ring Joint Gaskets fully comply with the ASME B16.20 standard and the API spec 6A requirements (where applicable).

Ring Joint Gaskets as per API- 6A in Carbon steel and SS316 is available

PRODUCTS AVAILABLE
KUNKLE RELIEF VALVES

Kunkle Valve is a leading supplier of Safety and Relief Valve Products for industrial and commercial applications, such as steam boilers, air, or non-hazardous gases.

Kunkle products are available with certification to ASME Section I, Section IV, and Section VIII. In addition, Kunkle Valve offers a range of non-code products.

High pressure relief valves open at a specific pressure to protect pumps and pipelines from exceeding stress limits.

KKD Marine has stocks of safety relief valves from Kunkle from ¼” to 2” in stock.

PRODUCTS AVAILABLE
FILTERS & MUFFLERS

KKD Marine stocks filters from Donaldson, Sullair, Baldwin, IR, Quincy, Harmsco, EMD and Atlas Copco.

Air and Oil filters as well as water purification filters from 5 to 20 microns are available from stock. Items that are not in stock can be typically sourced in 2-3 weeks.

We can also supply all HVAC pleated filters and filter rolls from stock or deliver in few weeks.

Alwitco Mufflers are available from ready stock.

Spares of Quincy and IR can be also sourced from competitive aftermarket and OEM sources.

We have well developed supplier base for Atlas Copco Aftermarket spares from China.

PRODUCTS AVAILABLE
RUST CONVERTERS & PAINTING AIDS

KKD Marine has stocks of OSPHO Rust Converters. When applied to rusted surfaces, it resists/retards rust in chemical change on drying to a tough, hard surface ready for priming.

Paint Spray Cans from Rustoleum - Enable Paint Sprays, Primers from Rustoleum and Bosny for Quick Touch Applications.

High Quality Paint Brushes, Roller Refills - Imported Paint Brushes when you need the best are available from 1 inch to 4 inch. Also available Dog Leg Brushes and Roller Refills Imported.

Rust Protection Coatings - Cold Galvanising Sprays available from ASV, CRC, Rustoleum for Touch Up Application.

Surface Grinding Discs - From 4 inch to 9 inch we have stocks of all grinding discs for surface preparation. For hand applications we have Scotch-brite in Rough and Fine variants. For Sanding units, we have backup pads and circular Scotch-brite discs.

Cup Brushes for Rust Removal - M14 Cup Brushes from 2 to 4-inch dia from Osborn are available in ready stock for rust removal on surfaces prior to painting.

High Quality **3M Paint Masking Tapes** available in 2 inch size - Can stay for 14 days and leave no residue

PRODUCTS AVAILABLE
LIGHTING SOLUTIONS

KKD Marine specializes in **EX Lighting** and can supply the most extensive range of explosion proof lighting solutions from world's leading companies.

- All ATEX Floodlights and Luminaires
- Confined Space Entry Ex Wolf Lamps
- Helideck Perimeter Lights
- Ex Glands and Accessories from Hawke and CMP
- Portable Ex-Lighting
- Ex Beacons, Sounders and Alarms
- Q-Light Range of Ex Products from Korea
- Products from MEDC, Cooper, E2S, Appleton, Eaton, Tranberg, Point Lighting, etc. are in stock or can be sourced upon request.
- Eaton Plugs and Sockets, Appleton, Killark, Stahl Accessories in stock

PRODUCTS AVAILABLE
ROTARY HOLE COVER

When working close to the rotary table, there is a risk of objects falling into the well or down below, which can cause damage to the equipment, shutdowns, delays, and costly repairs. KKD RH-COV (Rotary Hole Cover) is a durable tarpaulin hole cover with Velcro strips. It is installed around the drill pipe or tubular as a barrier for dropped objects prevention. This increases the safety and efficiency of work around the rotary table, by preventing objects from falling into the well.

KKD RH-COV (Rotary Hole Cover) is fast and easy to install or remove, while fitting tightly around a wide range of tubulars, the weight of only 3 kg makes it easy to handle and fast and easy to install around the tubular. Made of durable high visibility orange tarpaulin Waterproof Weight: 3 kg. Dimensions (Can be customised upon request) Outer diameter: 75”; Inner hole diameter: 3” – 10” with flexible Velcro collar ; Collar height: 6”

PRODUCTS AVAILABLE
SPILL CONTROL ABSORBENTS

KKD Marine has very large inventory of spill control products in stock. We have emergency repair putties to contain a spill immediately and all absorbents to absorb the spills.

KKD Marine has stocks of absorbent booms, socks, pillows, pads (light, medium and heavy duty) and granules for Oil Only, Chemical, Universal Applications.

We can make customized spill kit based on the absorbency required in bags and drums.

UN-DOT approved spill overpacks are in stock also.

Brands stock include Brady, NewPig, Spilltech, Oil-Dri, etc.

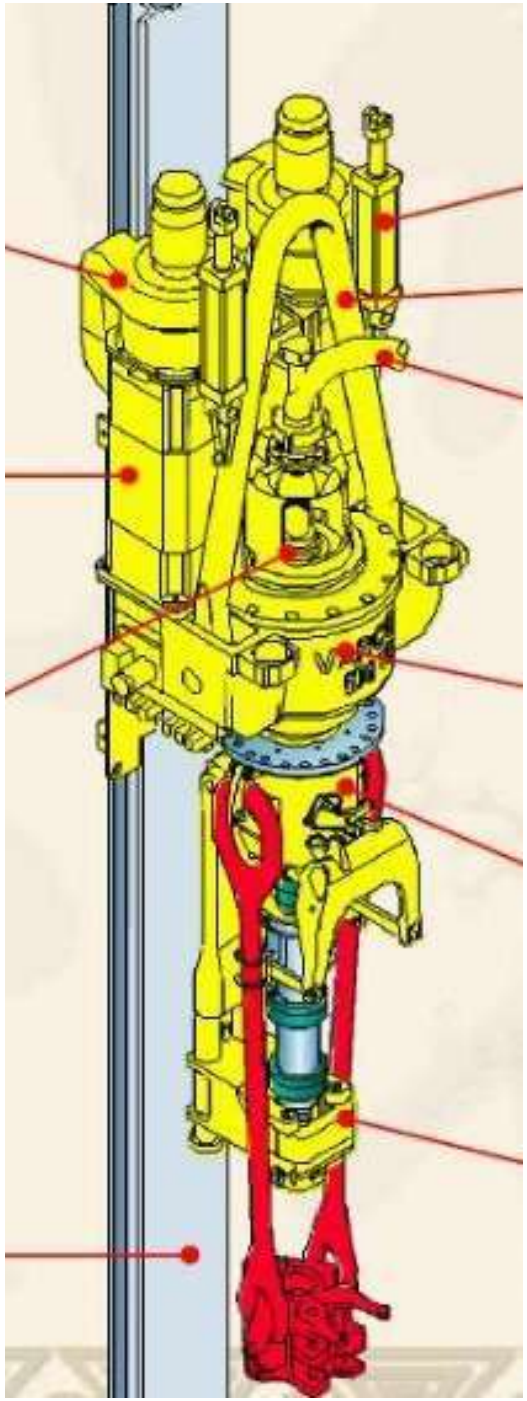

PRODUCTS AVAILABLE
OEM REPAIR KITS & SPARES

KKD Marine has a large inventory of surplus spares sourced from rigs coming to Alang for breaking. These spares can help reduce downtime when needed urgently by any rig in India.

Pricing will be a fraction of the OEM spares as these are sourced at very competitive prices from ship breaking yards, inspected and stocked.

Brands and Spares include products from Southwest, NOV, Hydril, Derrick, Gilmore, IR, CAD, Crown, MD Totco, F-E-T, Kunkle, Demco, FMC, Cameron Oteco, Koomey, Packard, Rigtools, etc.

Please check with us for what you need immediately and could be in stock with us.

PRODUCTS AVAILABLE
SAFETY PRODUCTS

KKD Marine has a large range of PPE and Workplace Safety Products for immediate deliveries

- Lockout Tagout Range
- Draeger Escape Masks
- SCBA and Billy Pugh Boxes
- Safety Signages and Tapes
- Coveralls, Eyewear and EarMuffs
- Blasting Hoods and Boots
- Balaclavas, High Visibility Hoods
- Leather Aprons, Sleeves & Boot Covers
- Impact Gloves, Cryogenic Gloves and more
- Gas Detectors H2S

PRODUCTS AVAILABLE
FIREMEN RANGE

KKD Marine has good inventory of the following products for immediate deliveries

- Single Jacket Hose with NST Brass Couplings
- Double Jacket Hose with NST Brass Couplings
- Fog Nozzles NST 1-1/2 and 2-1/2”
- Brass Ball Valves 2-1/2” NPT
- 90 Degree Angle Valves
- Hydrant Adapters
- Firemen Helmet Bullard
- FR Balaclavas
- NFPA Firemen Jacket & Trousers
- Smoke Escape Masks Sundstrom
- Fire Gel Blankets
- Junkin Safety Woolen Blankets

PRODUCTS AVAILABLE
RIGGING SPECIALTY

KKD Marine stocks Weldon Pad Eyes, Nautilus Hooks, RigTools Lifting Clamps, Drum Lifters, Manual Lifting Aids and more.

We can source chain slings, master links, turnbuckles, sheaves, sockets, Skookum blocks, wire rope slings, polyester webbing slings, lashing ratchets, shackles, delta plates, snatch blocks, subsea hoists, ROV Shackles and all other rigging hardware.

Brands we work with includes Crosby, Greenpin, Ropeblok, Gunnebo, Rud, Nautilus, Sealinkers, PSC, etc.

Recertification services are available for slings and other rigging hardware in Visakhapatnam and Kakinada.

PRODUCTS AVAILABLE
WELDING SPECIALTY

KKD Marine stocks Uniweld, Ameriflame and Victor welding products and accessories like regulators, welding handles, kits, flashback arrestors, welding gloves and aprons from Tilman, Fibremetal Visors and Faceshields, Shade 5 Glasses, Replacement Welding Visor Glasses, Triple Flint Lighters, Welding Cable Connectors from Tweco, Gouging Rods, Brazing Alloys, Silver Flux, Welding Blankets, Fire gel Blankets and lots more for immediate deliveries.

We can source and supply any welding items as required including cables, cutting torches, welding machines, etc.

PRODUCTS AVAILABLE
MARINE CHEMICALS

KKD Marine stocks the complete range of Unitor Chemicals in stock in its warehouse in Kakinada. Product range includes cleaners, degreasers, rust converters, engine cooling water system treatment, diesel engine air cooler cleaners, boiler water treatment, descaling chemicals, sewage waste treatment cleaners and more.

We can source products from RXSOL Vizag warehouse for immediate delivery of any products required in Kakinada

As on today, KKD Marine has over 10 tons of Unitor products in its range with over 400 pails of 25/30 litres.

PRODUCTS AVAILABLE
HAND AND WORKSHOP TOOLS

KKD Marine has very large inventory of scaffolding wrenches, scaffolding belts, tape measures, sockets and wrench sets, large heavy-duty spanners, Gasket Cutters, Punch Sets, Saws, Sledgehammers, Vises, 110V Power Tools, Cordless Power Tools, IR Needle Scalers, Aurand Descalers, Insulated Tools, Non-sparking Tools, Work at Height Non-Drop Tools and lots more for immediate deliveries from its store at Visakhapatnam.

Brands we work with include Proto, Westward, Stanley, Groz, Starett, Irwin, Gearench, Williams, Snap-on, Blue Point, Cromwell, Facom, Gearwrench, Tekton, Cromwell, Bondhus, Salisbury, EgaMaster, ChannelLock, Crescent, Lufkin, Bosch, Dewalt, Makita, Gedore, Ridgid, IR, CP, etc.

PRODUCTS AVAILABLE
MRO AND JANITORIAL RANGE

KKD Marine has stocks of all maintenance sprays for quick maintenance including cleaner, degreasers, lubricants, and more from Rocol, CRC, ASV, Molykote, Cortec, Ambersil, Rustoleum etc.

A whole lot of sealing compounds, gasketing compounds, grinding pastes, thread repair products, dope brushes, Scotchkote coatings, drain cleaners, garbage liners, wheelie bins, Cable Ties, Band-it straps, Duct Tapes, flashlights, floor cleaners, disinfectants, and over 100 skus including mops, squeezes, deck brushes, etc are in stock in the store in Visakhapatnam.

All kinds of abrasives, adhesives, reagents, fuses, FRLs and everyday essentials items needed by industry and drilling rigs and vessels are in stock with us.

PRODUCTS AVAILABLE
ADHESIVE TAPES RANGE

KKD Marine has one of the largest range of adhesives tapes in stock. Be they SOLAS Reflective Tapes, 3M Masking Tapes, Lane Marking Tapes, Hazard Identification Tapes, Arrow Marking Tapes, Retro-reflective tapes, Photo Luminescent Tapes, Fiberglass Tapes, Duct Tapes, Anti-splashing Tapes, Weather sealing Tapes, Denso Petrolatum Tapes, 3M Insulation Tapes, Pipe Wrap Tapes, Packing BOPP tapes, Brady and 3M Anti-skid Tapes, Aluminum Foil Tapes or anything else you are likely to find them all in stock with us.

We also have floor applicator units for lane marking, hand dispensers and other application aids.

Tapes constitute one of the major stock items in KKD Marine. Please visit the store to see the range.

PRODUCTS AVAILABLE
LOCKOUT TAGOUTS RANGE

KKD Marine has very good inventory of Lockout Tagout products in stocks

- LOTO Padlocks
- Hasps
- LOTO Kits
- Circuit Breaker Lockouts
- Valve Lockouts
- Cable Lockouts
- LOTO Tags
- Display Boards
- Group Lockout Boxes
- Rotary Push Button Covers and more

PRODUCTS AVAILABLE
ELECTRICAL SAFETY

KKD Marine has very good inventory of the following products in stocks

- Electrical Gloves
- Over Gloves
- Fiberglass Rescue Poles
- Arc Flash Hoods
- Arc Flash Visors
- Insulated Hand Tools
- Hazmat Boots
- Arc Flash Gloves
- Glove Inflator Kits

PRODUCTS AVAILABLE
EYE PROTECTION SHOWERS

KKD Marine has the compact Gravity Operated Haws Eye & Face and Combination Showers in stock

Haws 7501 - The Haws 7501 compact portable eyewash is a 9-gallon (34.1 L) capacity gravity operated portable eyewash that supplies a continuous flow of water for a full 15 minutes at .4 gpm. This unit is a cost-effective solution ideal for locations without access to potable water, including temporary decontamination sites, temporary treatment facilities, and short-term job sites.

Model CL-001i is a shower and eye washer with sieve (shower), stainless steel eye wash (basin) and ABS plastic eye washers with protection caps against small debris, insects and chemicals. The material of the pipes and fittings is made of stainless-steel Model CL-001i meets American Standard ANSI / ISEA Z358. 1-2009 and the recently published Brazilian Standard ABNT NBR 16291: 2014 for Emergency Shower and Eye Wash.

Spares of various HAWS models in stock with us

PRODUCTS AVAILABLE
TILLMAN WELDING GLOVES

KKD Marine has a large inventory of Tillman Welding Gloves in stock.

The ultimate in performance and quality, featuring premium materials and unsurpassed protection technologies. Professionals demand Tillman®… The Brand Pros Demand for over 90 years.

Stick Welding - Stick welding produces the most heat, sparks and spatter resulting in the need for gloves with more heat insulation. Tillman® Stick gloves offer superior protection from the rigors of stick welding.

Tig Welding - TIG welders want the best feel on the filler metal. Tillman's TIG glove maximizes dexterity.

Mig Welding - Enhanced dexterity for a great feel on the MIG trigger or a plasma torch.

There is also stocks of FR Aprons for Welding Applications

PRODUCTS AVAILABLE
CABLE TIES

KKD Marine has a large inventory of Cable Ties in stock.

We have Nylon Ties in White Color, UV resistant Black Cable Ties, Stainless Steel Metal Ties and Band-it and Raychem Stainless Steel Banding Products including straps and buckles.

Brands stocks include Surelock, Hellerman Tyton, Panduit and Thomas & Betts.

PRODUCTS AVAILABLE
ABRASIVES

A large inventory of surplus grinding and cutting wheels, 3M Polishing discs, Scoth-brite, Norton Abrasive Pads, Wood Sanding Discs, IR Polisher, etc. is available.

Also, all surface conditioning products including buffing wheels, wire brushes, cup brushes, metal and wood polishes, rust converters and glass scratch removers are available from stock.

See the complete range in https://rigconsumables.in/shop/

PRODUCTS AVAILABLE
FITTINGS

KKD has an extensive inventory of Parker Hose Fittings in stock. We also stock Dixon and Campbell Malleable Iron Hose Fittings, Beam Clamps, Whipchecks and Whipsocks, Plumbing Fittings, Instrumentation Fittings including adapters, Needle valves, Subsea Fittings, etc.

Spirstar and High-Pressure and ultra high pressure fittings including Autoclaves and high-pressure hoses are available upon order. We can source these real quick as our associates in Houston and Aberdeen carry large inventories of these products.

PRODUCTS AVAILABLE
EMERGENCY DAMAGE CONTROL KITS

KKD has several emergency response products in stock for use around the rigs and helidecks including plugging putties, epoxy putty sticks, pipe bandage repair products, brass scupper plugs, rescue knives, multi-purpose tools, portable lighting products including cyalume, flashlights, lanterns, escape grab bags, H2S Detectors, Smoke Escape Masks, Rescue Sticks and hose repair clamps in its range.

PRODUCTS AVAILABLE
ELECTRICAL MOTORS

KKD has small HVAC and other general purpose electrical motors (surplus new units) in stock. Brands include GE, Century, Marathon, Baldor and WEG units and these are priced very competitive.

We also have stocks of carbon brush holders, carbon brushes, batteries, ballasts, step-up step-down transformers, C, D, 6V Zinc Chloride, 6V Lead Acid Batteries and other electrical accessories like Motor Cleaners, Varnishes, Fuses, Electrical Contact Cleaners, Thread Lubricants, etc.

PRODUCTS AVAILABLE
DIAPHRAGM PUMPS

KKD has stocks of all Wilden Spares of M4, M8 and M15 units in stock. These are genuine Wilden surplus items and available at competitive pricing and incudes discharge manifolds, piston outer, valve seats, liners, seats, valve balls, diaphragms in Buna and Teflon, shafts, etc.

KKD can also import and deliver OEM equivalent replacement products from China and has a proven source of these aftermarket products.

Small diaphragm pumps can also be delivered from stocks, and repair kits for major brands can be sourced and delivered.

PRODUCTS AVAILABLE
PRESSURE MEASURING

KKD has stocks of Pressure Charts from Graphic Controls, Barton, MD Totco, American Meter, etc.

We can import and deliver Sonceboz clocks, Barton Chart Recorders and other spares for pressure chart recorders.

Also available are pressure gauges with bottom and back connections from McDaniels, Excel, Enerpac, etc.

Also in stock are products like MD Totco W15 Fluids and Pump.

PRODUCTS AVAILABLE
LUBRICATION RANGE

KKD has stocks of general-purpose grease cartridges, grease guns, adapters, nipples and other lubrication accessories in stock.
Brands include: GROZ, Alemite, Lincoln and Westward.

In the grease cartridges, we have stocks of Shell, Mobil, Total, Castrol, Mystik, etc.

Also available ZX1 super grease for NOV washpipes, RS Claire 601 valve lubricants, Quincy compressor oils, ASV anti-seize compounds and wire rope lubricants, ASV zinc, copper and metal-free dopes and all lubrication aerosols.

PRODUCTS AVAILABLE
TRASH HANDLING RANGE

KKD has stocks of Jumbo Trash Bags (Compactor Trash Bags) in white, black, green and red to segregate organic, hazardous and solid wastes.

Also available are jumbo trash bins liners in white and black colors right up to 55 gallons in stock.

KKD can source and deliver colored trash bins, Sharpe Containers, Hazmat bags, Compactor Spares, Food and Waste Oil Recycling Machines, etc.

PRODUCTS AVAILABLE
TRASH HANDLING RANGE

KKD has stocks of Jumbo Trash Bags (Compactor Trash Bags) in white, black, green and red to segregate organic, hazardous and solid wastes.

Also available are jumbo trash bins liners in white and black colors right up to 55 gallons in stock.

KKD can source and deliver colored trash bins, Sharpe Containers, Hazmat bags, Compactor Spares, Food and Waste Oil Recycling Machines, etc.

PRODUCTS AVAILABLE
PSC HANDS-FREE RANGE

KKD offers a complete range of PSC Hands-Free Safety Tools including SafeGuider Taglines, LoadGuider and Guide-it Push-Pull Poles, Hammer Union Wrenches, Hands-off Safety Tools like Ezy-Lift Pipe Lifters, Handle-Tech Hose Lifters, Fingersaver, etc.

Also available are safety gloves and glove clips, hand barrier creams, conditioning creams, etc.

PRODUCTS AVAILABLE
SAMPLE BOTTLES AND BUNKER SAMPLER, IATA CANS

KKD offers Kittiwake and other oil sample bottles, labels, cubitainers, Kittiwake Bunker Sampler in stock.

Also available against order are IATA metal cans in 1, 5 and 20 litres with certificates.

PRODUCTS AVAILABLE
MUD LAB EQUIPMENTS

KKD can source and deliver mud lab equipments including PHPA Kit, Mud Testing Airplane Kit, Precision Balance, Refractometers, Viscometers, H2S Test Kits, SOBM Kit, Marsh Funnels, Filter Press and more.

Also available in stock is Mud Balance and Marsh Funnel and Mugs.

PRODUCTS AVAILABLE
DRILLING & WELL SERVICING RANGE

KKD can source and deliver stabbing guides, inserts, dies, mud pump fluid end expendables, rotary slip handles, elevator tongs, drill pipe wipers, Varco ST80 spares. Brands include WPSI, NOV, Oteco, Shaffer, SouthWest, Canrig, etc.

Also, when needed by customer urgently, KKD has sources in Alang for immediate sourcing of several of these parts to avoid a downtime.

PRODUCTS AVAILABLE
PUMPS & COMPRESSORS

KKD can source and deliver Pumps from Hamworthy, Omel, AlWeiler, Danfoss, CAT and other OEMs. It also has experience handling Compair, Atlas Copco, IR, Sullair, Quincy spares. It can deliver Scroll Compressors in a short lead times.

When it comes to OEMs in these product groups, we have a large supplier base worldwide to meet your delivery requirements.

Where aftermarket spares are required, KKD has a network in China for aftermarket spares of all major OEMs.